GameHub.io User's Manual

Course: UCCS CS 3300 – Intro to Software Engineering

Date: 04/25/2026

Project: GameHub.io

Description:

GameHub.io is a centralized adless gaming platform, which allows users to play their favorite games, track their scores, and be ranked against their friends and peers. Many current websites don't include nostalgic games from our childhood like Hangman and Snake or have features for users to easily track their progress and compare their performance against their friends. GameHub.io solves all of that by creating a centralized website with everyone's favorite nostalgic games, and friendly competition amongst friends, with an ad-free experience.

Requirements:

Operating System: Windows 10 or later, macOS 11 (Big Sur) or later, or a modern Linux distribution.

Web Browser: Google Chrome (v100+), Mozilla Firefox (v100+), Microsoft Edge (v100+), or Safari (v15+). Internet Explorer is not supported.

Internet Connection: A stable broadband connection with a minimum speed of 5 Mbps is recommended for optimal performance.

Display: A resolution of 1920×1080 or greater is recommended.

Browser Settings: JavaScript and cookies must be enabled. Pop-up blockers should be configured to allow pop-ups from "cs3300-groupproject.web.app".

Mobile Devices: The application is compatible with iOS 15 or later and Android 10 or later, accessed via the device's default or supported browser.

Perspective:

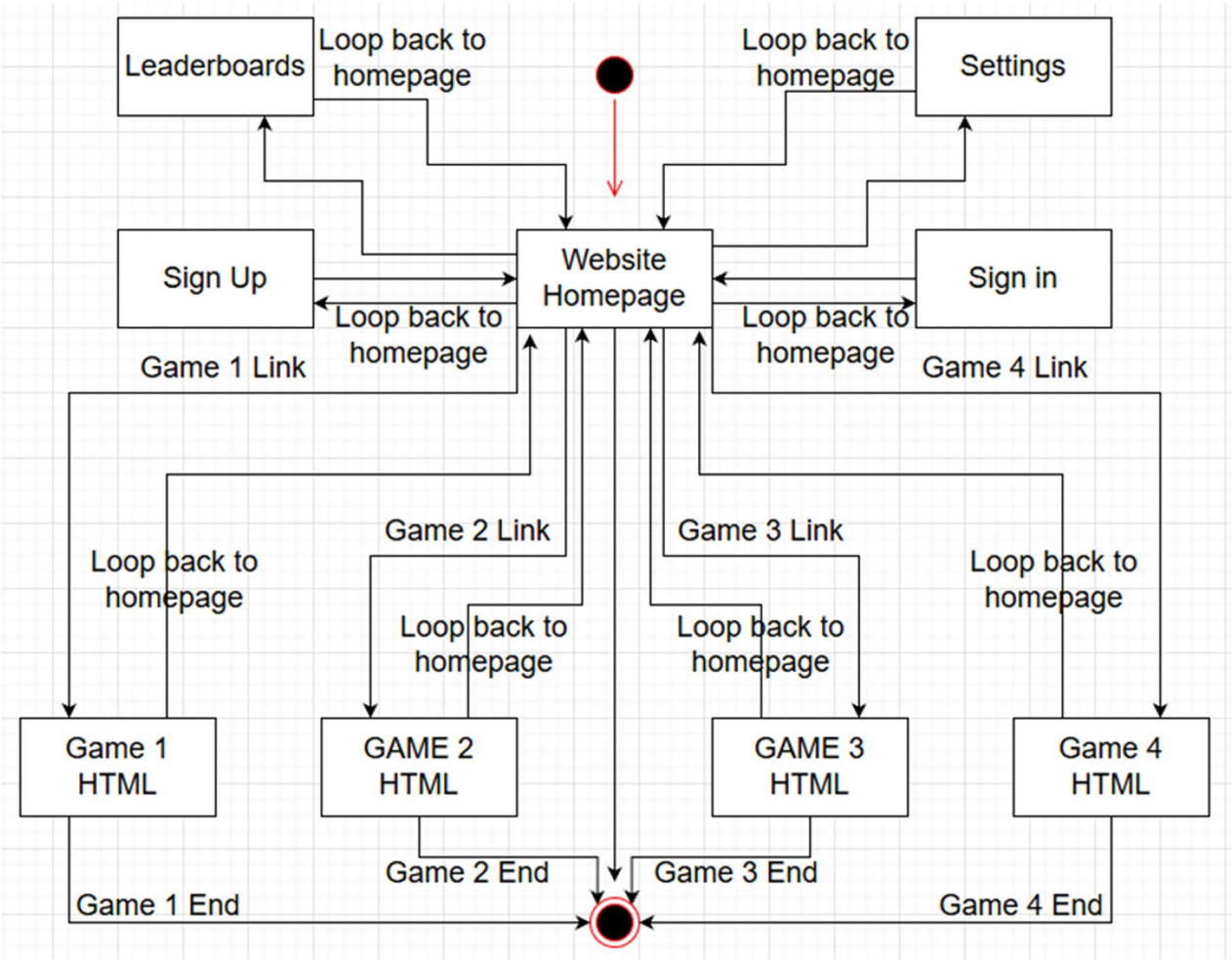

Section 3: Installation

No installation required, just open a browser and enter “cs3300-groupproject.web.app”!

Section 4: Running GameHub.io

Step 1:

Open any compatible browser outlined in the requirements above and enter the website URL – “cs3300-groupproject.web.app”

When the website opens it should look similar to the image below…

Step 2:

To access the full feature list of our website you will need to create an account, If you already have one you can select sign-in, otherwise select “Sign Up” in the top right corner to create an account.

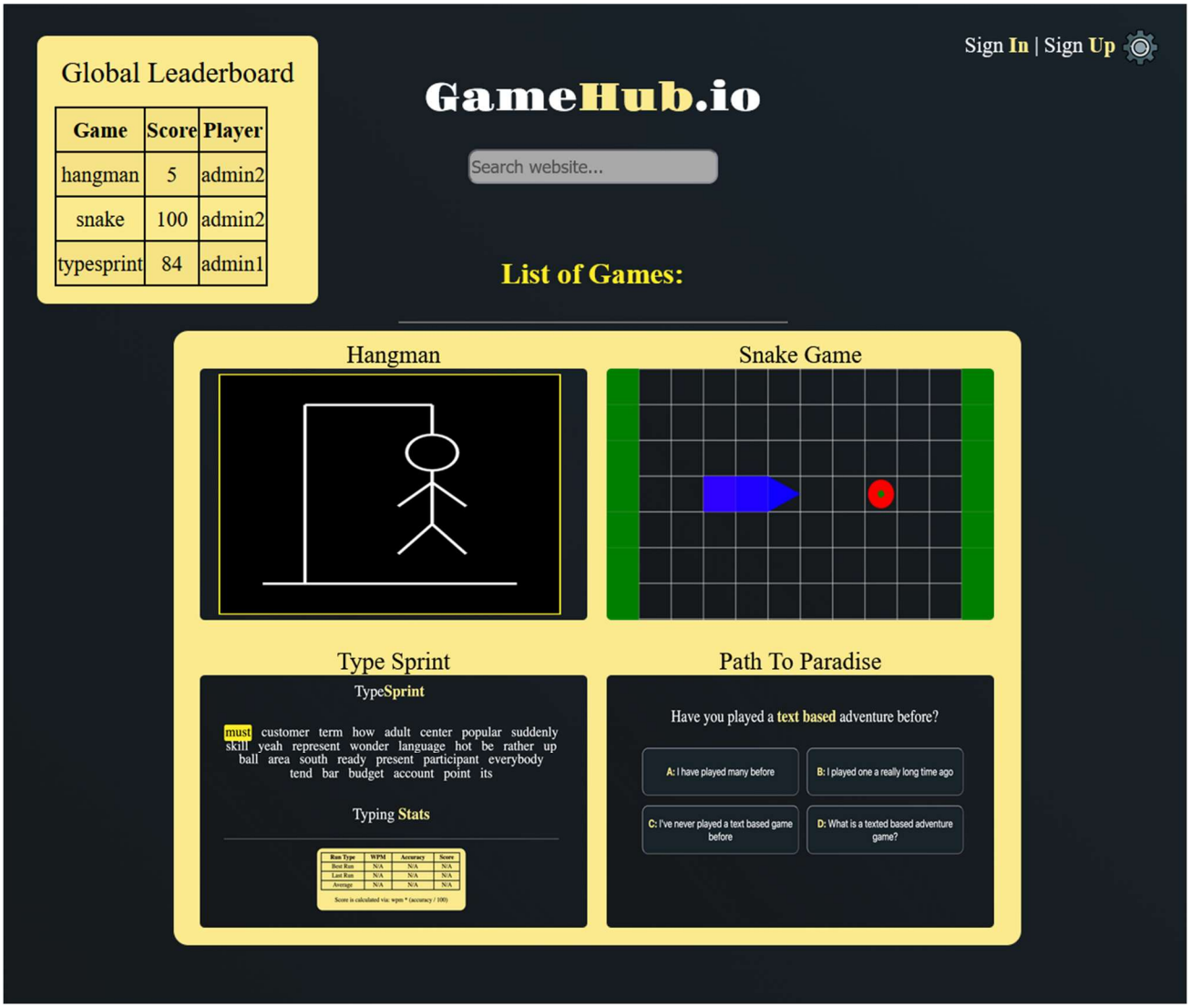

Step 3:

Enter in your choice of a username and a password then click “Sign Up”!

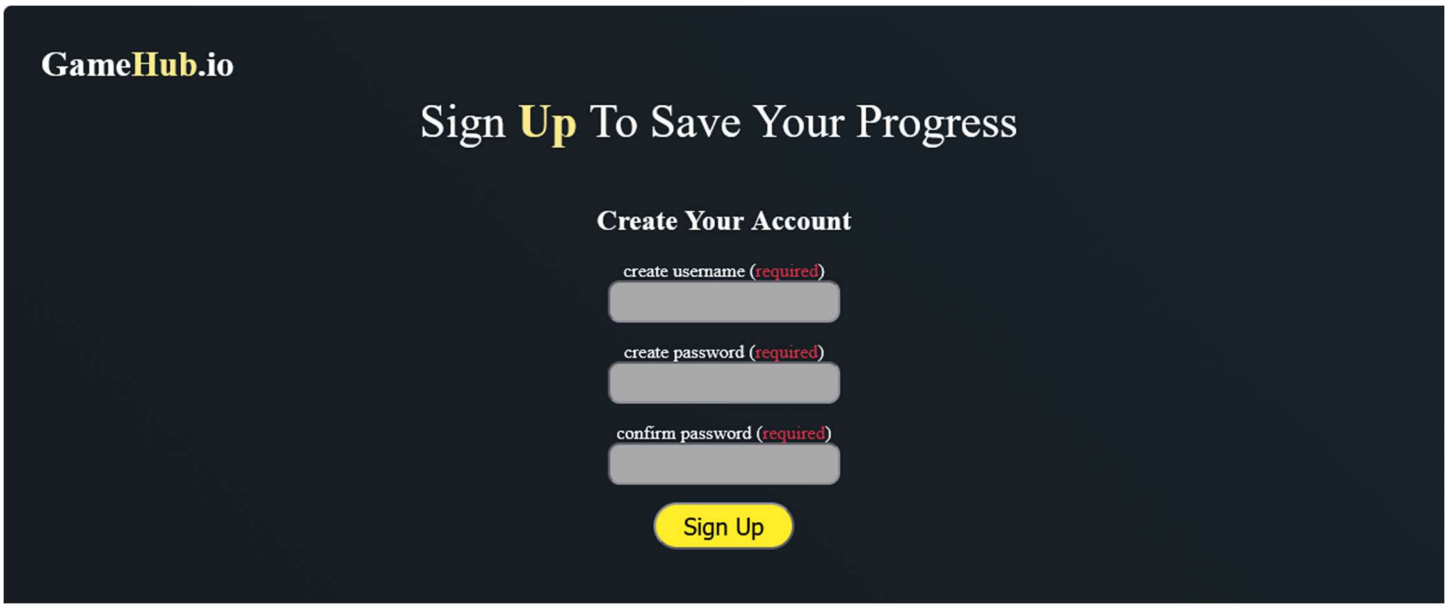

Step 4:

After getting redirected to the homepage you should see a welcome message in the top right corner where the Sign In / Sign Up Links used to be!

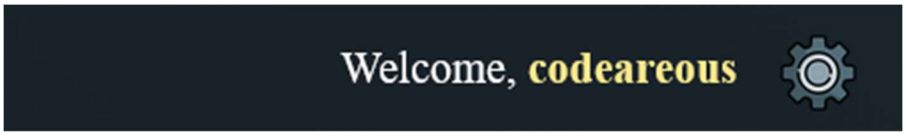

Step 5:

Now that we are back on the homepage and signed in, everything should be accessible. Press TAB or click on the search bar in the middle of the screen to start searching the website. Search “leaderboard” and then hit ENTER to open the leaderboard page (OR you can click on the “Global Leaderboard” Section in the top left of the website…

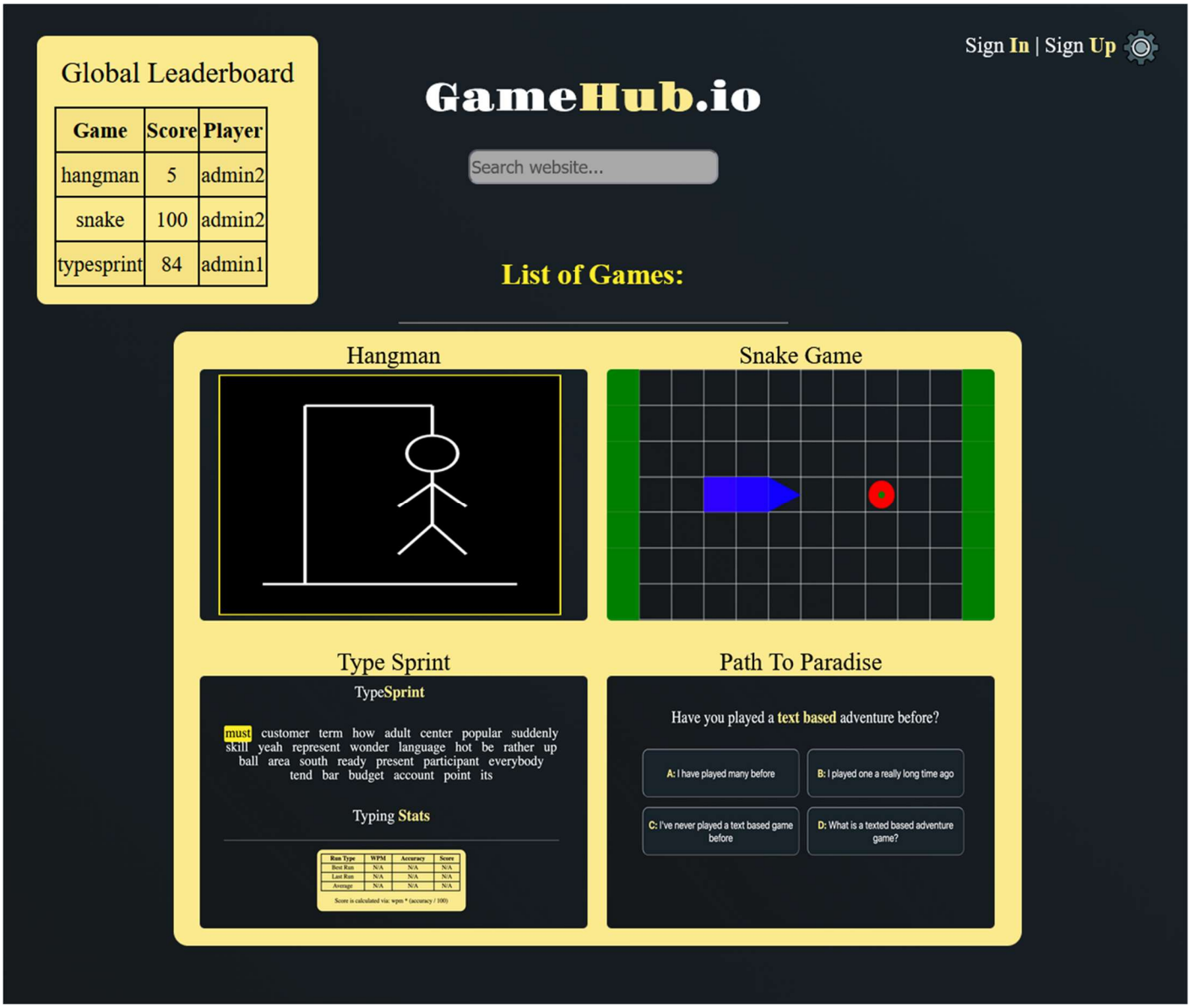

Step 6:

Using the same navigation techniques, Open the Settings (searching or clicking the gear in the top right) and open any of the games by searching for them or clicking them on the screen! Start Playing and Enjoy!!!